MINI TRACK LOADER

EN

CNF
MINI TRACK LOADER

Ideal for landscaping, construction and hire companies, this mini track loader is a multi-purpose vehicle for use on construction sites or in hard-to-access spaces.

Designed for earth work, digging trenches and moving material on all surfaces, such as muddy or sandy soils, it guarantees maximum stability and safety at all times.

High performance, driving comfort and reliability are the three focal points on which the design of this machine was based.

Despite its small size, it is an extremely durable machine that is easy to manoeuvre even by inexperienced operators.

With ROC of 1.000 lbs, the CNF XT500 is the perfect mini track loaders for your small site jobs.

You can squeeze it through doorways and fence gates and get your job done indoor or outdoor.

DOUBLE CHOICE

XT500 is available with two different track widths to cope with different working conditions. Both provide high traction and control, as well as stability and comfort for operators.

NARROW TRACK

The 200 mm–7.87 inch standard version ensures excellent access and manoeuvrability thanks to a maximum machine width of 900 mm and a ground pressure of 0.31 kg/cm2.

WIDE TRACK

Available as an option, the 230 mm–9 inch wide track increases the overall stability of the machine and at the same time reduces ground pressure. 0.27 kg/cm2 and a maximum width of 930 mm–36.6 inch are ideal for working on sensitive surfaces while leaving a minimal footprint.

XT500
Great things in small spaces

POWER
An efficient hydraulic system perfectly matched to a powerful and reliable EU STAGEV–EPA TIER 4 diesel engine provides operators with high travel speeds, fast work cycles and high hydraulic capacity.

MAINTENANCE
All routine maintenance operations are easy to perform thanks to inspection windows and casings specially designed to facilitate and speed up these procedures. Thanks to the permanently lubricated grease bath bearings, there is no need to grease the rollers each day.

SIMPLE AND MANOEUVRABLE
XT500 is the most agile and powerful mini track loader on the market. In tight spaces where powerful lifting or digging force is required, this small machine also others maximum performance in terms of hydraulic capacity when using attachments to dig trenches or insert piles.

COMFORT
Cushioned operator platform, ISO joystick controls, ergonomic handlebar and other features are designed to reduce operator fatigue and increase comfort. The high driving position also provides full visibility, ensuring optimal control during operations.

STANDARD EQUIPMENT

- Hydraulic pilot joystick control
- Loader and ground drive control lockout
- Cushioned operator platform
- Operator presence sensor
- Operator grab handlebar
- Key start
- Hand throttle
- Engine tip-over shut-off
- Glow plug starting aid
- Locking fuel cap
- Electric fuel pump
- Lock-able hood compartment
- Dual hydrostatic drive motors
- 5 roller undercarriage
- Narrow rubber track belt
- Dual acting auxiliary hydraulics
- Loader arm float
- Radial lift geometry
- CII mechanical attachment coupler
- Loader lift arm support strut
- 12V power plug socket
- Front and rear LED work lights
- Master battery disconnect
- Horn
- Base warranty coverage: 2 Year
- Drain attachment connection

OPTIONAL EQUIPMENT

- Wide rubber track belt
- Bio-hydraulic oil and lubricants
- Bolt on bucket teeth
- Bolt on bucket cutting edge

XT500 ATTACHMENTS

Common on mini track loaders, XT500 is equipped with the CII (Common Industry Interface), pin-on attachments style is easy to use and to service thank to the greasable pin.

Attachment for Common Industry Interface:

- → 36 inch Front Bucket
- → 37.4 inch Front Bucket
- → Hydraulic Breaker
- → Auger
- → Pallet Forks
- → Trencher
- → Sweeper Bucket
- → Concrete Mixer
- → Angle Broom
- → Grapple

Dimensions	
Lenght (without bucket)	1900 mm · 74.8 inch
Machine width (7.87 inch track)	900 mm · 35.4 inch
Machine width (9 inch track)	930 mm · 36.6 inch
Height	1330 mm · 52.4 inch
Height to pin bucket	2116 mm · 83.3 inch
Performances	
Tipping load	1246 · 1298 Kg / 2794 · 2861 lbs
Rated operating cap (35% tipping load)	436 · 454 kg / 961 · 1000 lbs
Travel speed · forward	7 km/h · 4.34 mph
Travel speed · backwards	5 km/h · 3.10 mph
Empty weight	1380/1410 kg · 3082/3108 lbs
Ground pressure · STD track	0.27 kg/cm^2
Ground pressure · OPT track	0.31 kg/cm^3
Undercarriage	
Roller type	Fixed rollers
Rollers n°	5
Track tensioner	Grease hydraulic adjustment
Ball bearings	Grease bath
Standard track size	200x72x43
Optional track size	230x72x43
Engine	
Model	Kubota D902
Emissions	EU stage V · Epa Tier 4 final
Fuel	Diesel
Power	18.5 Kw · 25 Hp @2600 Rpm
Cooling system	Liquid
Fillings	
Fuel	50 L
Hydraulic oil	32 L
Operation	
Steering and drive	Iso joystick
Tilt and lift	Iso joystick
Attachment	Single lever dual direction detent
Hydraulic system	
Transmission	Hydrostatic
Hydraulic pump capacity	48 l/min
Aux pressure	180 bar
Transmission type	2 tandem pumps + radial piston pumps

→ A	2824 mm · 111.1 inch	→ L	2787 mm · 109.8 inch
→ B	2105 mm · 82.87 inch	→ M	175 mm · 6.88 inch
→ C	1484 mm · 58.42 inch	→ N	22°
→ D	25°	→ O	30°
→ E	90°	→ P	1318 mm · 51.9 inch
→ F	45°	→ Q	920 mm · 36.2 inch
→ G	355 mm · 13.9 inch	→ Q1	950 mm · 37.4 inch
→ H	1100 mm · 43.3 inch	→ R	900 mm · 36.2 inch
→ I	2132 mm · 83.9 inch	→ R1	930 mm · 37.4 inch

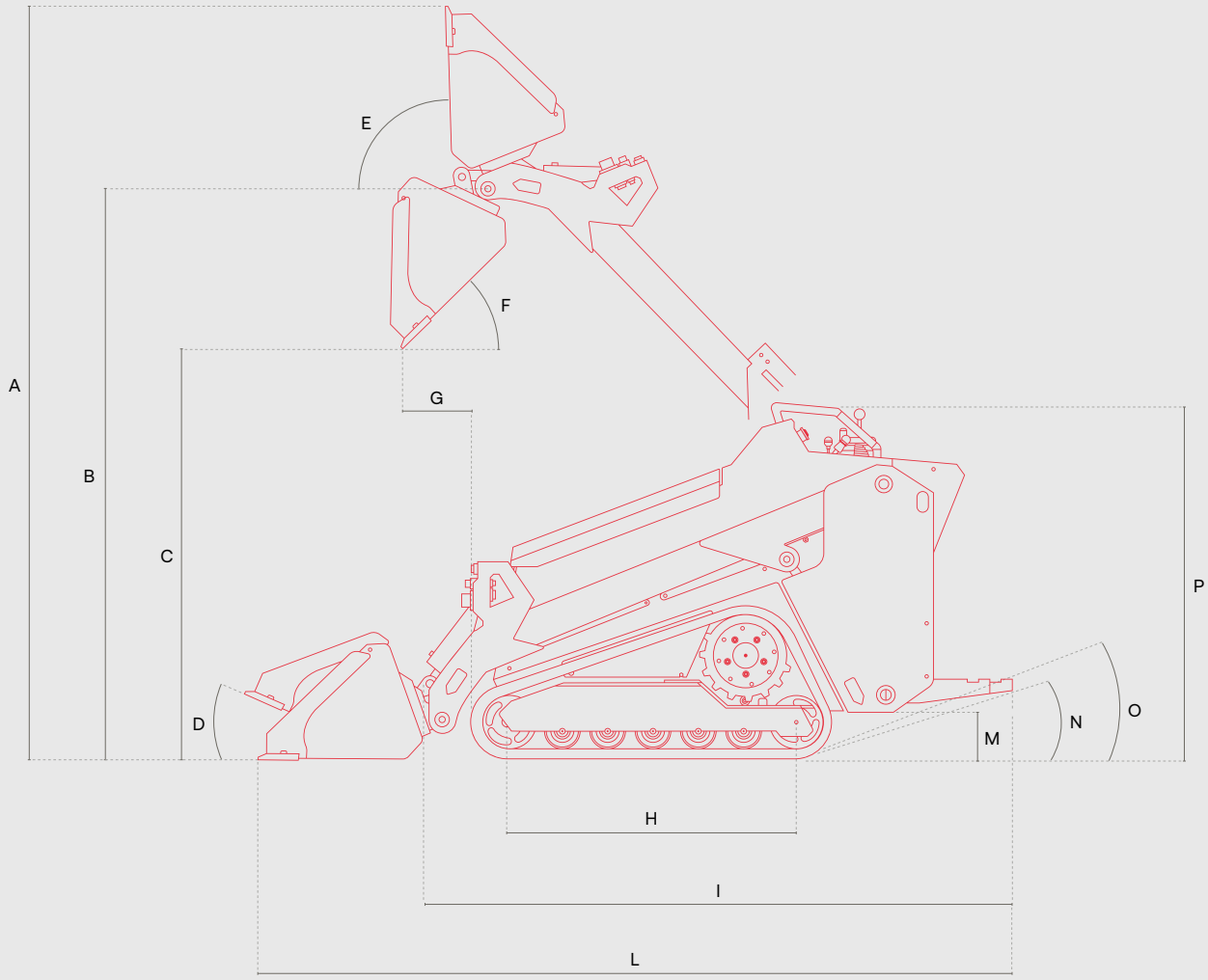

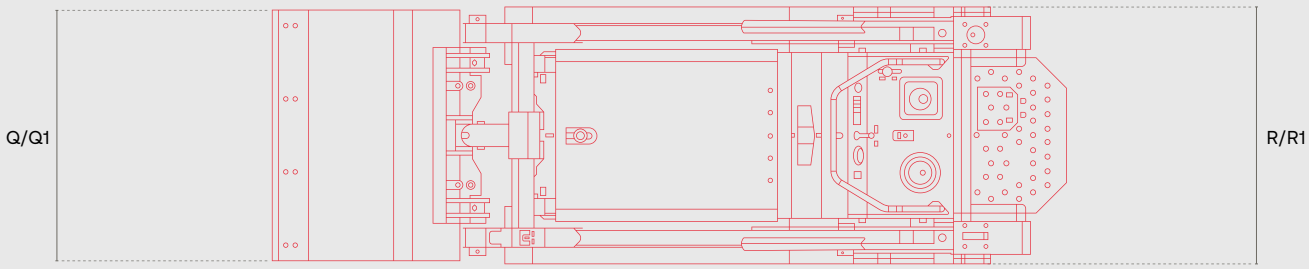

↘
The details, descriptions and illustrations contained herein must be intended as guideline. C&F srl reserve the righe to make any changes deemed necessary without notice. Every product can be equipped with optional only under specific request.

C&F SRL
Viale Finlandia 8
73100 Lecce, IT
VAT 036 19 66 07 50
+39 0832 24 39 60
.
www.cnf-ce.com
info@cnf-ce.com